Safe, fast HV circuit breaker testing with DualGround™ technology

Substation personnel safety

From the earliest days of circuit breaker testing, safety of personnel has been the highest priority. The best way of enhancing safety is undoubtedly to increase the distance between personnel and devices carrying high voltages.

Even when an object has been taken out of service however, there are three main ways it can remain or become dangerous through energisation by high voltage. The first is if a fault occurs and unwanted electrical potential reaches the object. The second is lightning affecting the power lines related to the object. The third and most common is capacitive coupling from a nearby live conductor producing a dangerous voltage on the object. These voltages can cause a current of 20 mA or even more through a human body and, according to IEC® EN 61010, currents above 3.5 mA are dangerous.

The only way to make an object safe for all the cases mentioned is to ground the object at all conductive points that would otherwise be free floating, and also where it is in contact with the surrounding system. In this way a safe zone is created and any current due to voltage on the object will take the shortest path to earth through the grounding cable, which is typically a 120 mm2 conductor. An object grounded in this way cannot become dangerous.

Regulations and laws require all objects to be grounded on both sides before any maintenance work is performed on them. There are, however, approved exceptions because it is not possible to do all types of maintenance work with both sides grounded. For example, main contact

timing of circuit breakers is usually performed with only single side grounding (Fig 1).

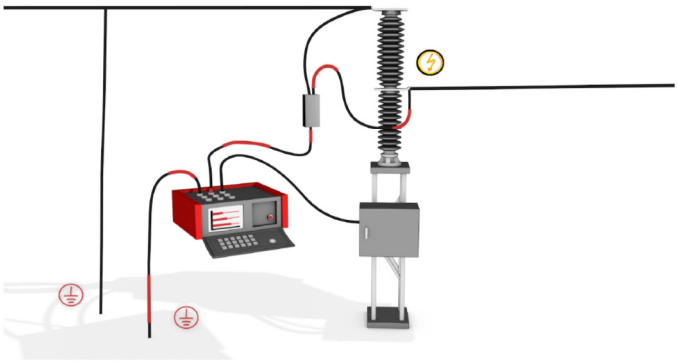

Fig. 1 The capacitive connection between live lines nearby the test object and lethal constant current generator that is formed.

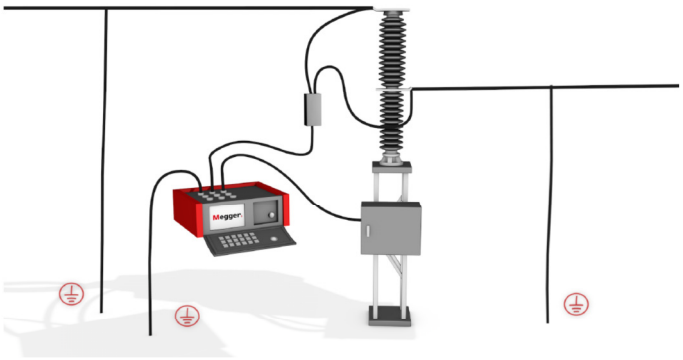

Fig. 2 Earthing both sides of the test object will lead the induced current to earth and provide a safe environment for the test engineer.

Another aspect of substation test equipment that is important for safety is the user interface. Operating the equipment must be straightforward, fast and easy. Field engineers need to spend their time and energy on the job in hand, not working out how the equipment works. This aspect is hard to quantify and is not covered in standards and regulations.

Conventional timing method

The conventional approach for main contact timing in circuit breakers is to use Ohm's law with a DC test voltage over the circuit breaker to distinguish the moment when the circuit breaker state changes from open to closed. This method is not based on a standard and there is, therefore,

no absolute reference point. However, at the present time, this is the technique that it most widely used.

With both sides of the circuit breaker connected to ground, this method does not work. Since the circuit breaker contact is short-circuited by the ground loop the DC test current will continuously flow regardless of the contact state, thus, this method will indicate that the breaker is continuously closed.

One way of overcoming this safety drawback has been adopted by EDF, the state-owned electricity company in France, which uses an automatic grounding device. A voltage sensor automatically closes a ground connection if there is a voltage potential between the object and ground. This device is used on one side while the other is grounded with a cable. With this technique, however, the timing test is more complicated and takes longer and the grounding device itself introduces another asset that might fail and therefore needs to be maintained.

Both sides grounded, DRM timing method

The DRM timing method was invented in 1993 by Programma Electric, which is now part of Megger. It was the first solution for measuring CB timing with both sides grounded (Fig 2). This method works by injecting a high current of around 100 amps while opening or closing the CB, monitoring the voltage and recording the dynamic resistance graph. This method was developed principally for outdoor HV breakers. Since contact resistance of the breaker is smaller than the ground loop, when the CB opens or closes the resistance graph will change and from this, the instant of closing and opening can be determined.

To put this into perspective, the resistance range of the ground loop is typically around a couple of milliohms while the contact resistance of the breaker when firmly closed is around 50 microohms. This means during

an open operation, the resistance level will increase from around 50 microohms to 2 or 3 milliohms. This large change can be used to determined closing and opening time while the ground loop is in place. This method provides a safe way of testing SF6 outdoor HV breakers. It does, however, have limitations.

The first difficulty is that since this method uses high current, it requires thick cables that make the instrument heavy to transport. For a two-breaks-per-phase breaker, it requires no less than nine 100 A cables!

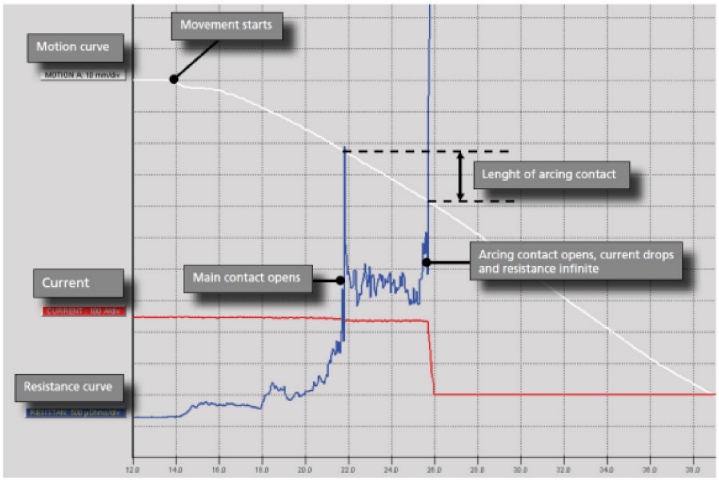

Fig. 3 In this open test, arcing contact only takes about 4 ms to open while having the higher level of resistance.

Secondly, in many cases, ground loop resistance is around 2 to 3 milliohms, which is comparable with the arcing contact resistance of the breaker. During open or close operations, the difference between arcing contact and main contact to close or open is in the range of 2 to 7 milliseconds. Since the arcing contact resistance and ground loop resistance in outdoor SF6 breakers are comparable, the thresholds are difficult to determine accurately, and the timing result could be off by 2 to 7 milliseconds if the instant of main contact operation is detected instead of the instant of arcing contact operation. According to both IEC and IEEE standards it is the first touch of the arcing contact that is considered

as the closing time and the last separation of the arcing contact that is considered as the opening time.

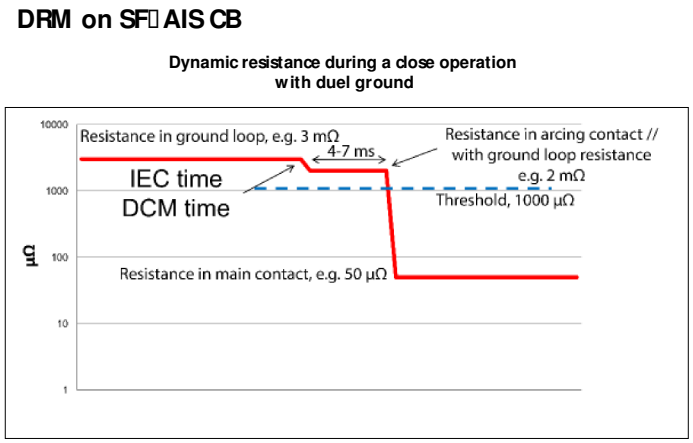

Fig. 4 Dynamic resistance graph showing various levels during close operation; When breaker is open with ground loop in place, when only arcing contact is closed and when breaker is fully closed.

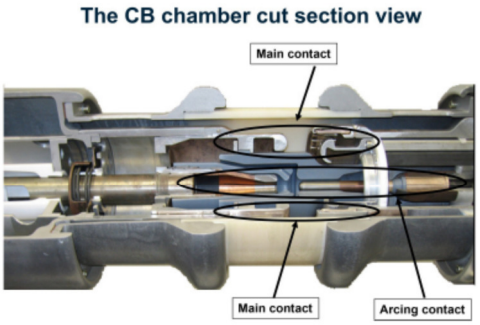

Fig. 5 Arcing and main contacts inside a breaker

However, according to IEC62271-100, the inter-phase synchronization maximum limit is 1/8 cycle which is 2.1 to 2.5 milliseconds maximum depending on whether it is a 50Hz or 60Hz system. An error of 2 to 7 milliseconds is therefore not acceptable. Fig 3 and Fig 4 show the arcing versus main contact resistance. Fig 5 illustrates the inside of the arcing contact versus main contact of the circuit breaker.

In some circuit breaker designs, a pre-Insertion (PIR) or a post-Insertion (breaking) resistor is connected in parallel with the main contact. PIRs have their own switches and are switched in a few milliseconds prior to or

after the main contact closes or opens, respectively. These resistors are shown in Fig 6 and Fig 7. Diagnosis of a circuit breaker with PIRs includes timing measurement of the PIR contact. This presents a third difficulty with the DRM method. With PIR and post-insertion resistor values from hundreds of ohms up to several kilohms, the resistance change with the parallel grounding line of milliohms will hardly be noticeable. To put some figures to this with a ground loop of 2 milliohms and a PIR of 200 ohms the two resistances in parallel would have a total value of 1.99998 milliohm. Open or closed PIR would make a difference of a 1/1000 of a per cent, which is not measurable with field equipment.

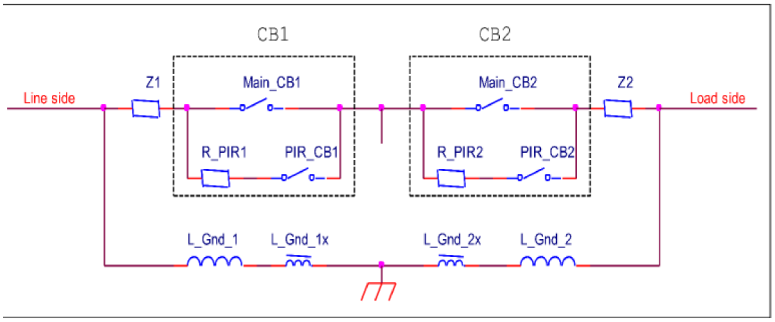

Fig. 6 Equivalent circuit of the circuit breaker phase with two contact pairs in series, each with a parallel contact pair with Pre-Insertion Resistor (PIR) and both sides of the breaker grounded. The grading capacitors are excluded.

The fourth and biggest challenge is when the DRM method is used on a GIS breaker. Unlike an outdoor SF6 breaker, a GIS breaker has very low resistance in the ground loop, down to as low as around 75 microohms, which is about the same level of resistance as the main contact, and only a fraction of the arcing contact resistance. This makes determining the open and close level using DRM method impossible (Fig 8) . Hence, for GIS breakers, one side of ground has to be opened, which presents the additional time-consuming challenge of finding connection points and it also exposes test engineers to risks of personal injury.

DRM was undoubtedly a good start to saving time and enhancing safety in some instances, but the method has several limitations. To address these, the DCM method was developed and patented in 2007 by Megger and, during 2017, an improved third generation of DCM will be released.

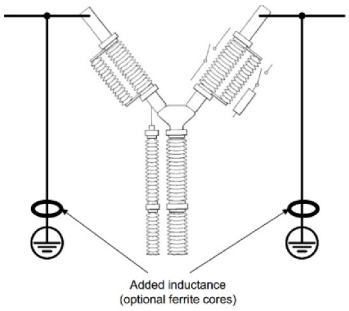

Fig. 7 Schematic illustration of a high voltage circuit breaker (one phase) with two contacts in series, each with parallel contact with PIR and both sides grounded and optional added inductance in the grounding wires

The third generation DCM for DualGround™ timing

The first generations of DCM used the fact that there is a change in capacitance when a circuit breaker is in the closed versus the open position. The third generation of DCM modifies this method slightly so that not just the capacitance but also the total impedance is analysed, using a high frequency signal.

When a circuit breaker operates from closed to open position it changes its properties from being almost purely resistive to almost purely capacitive. In a test situation with both sides of the circuit breaker grounded, the circuit will have resistive and inductive components through the ground loop, even though the breaker is open – see the equivalent circuit in Fig 6.

The circuit might also contain pre-insertion resistor (PIR) contacts (see Fig 6 and Fig 7), which also will affect the total impedance in the test circuit but less significantly than the main contact.

The advantage of the new DCM techniques that analyse the total impedance change rather than just the capacitance or the resistive change, is that it is possible to detect both the main contact and the PIR contact with both sides of the circuit breaker grounded.

The ground connection has a very limited influence on the resonant circuit for high frequency signals because the impedance in the ground cables is relatively high. In special situations, like applications involving GIS, the grounding connection requires an increase of inductive reactance on the ground connection. This is achieved by putting a ferrite clamp around the ground connector. The ferrite clamp is either two half-donuts that are easy to attach around a cable or a U-shape that is easy to attach around a bar.

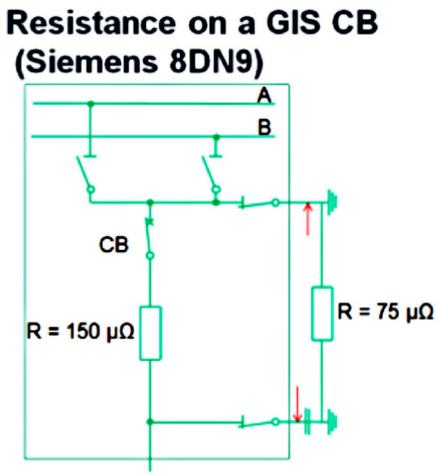

Fig. 8: 150 // 75 => 50 µΩ Thus, CB in Closed position=50 µΩ. CB in Open position=75 µΩ. CB in arcing contact position:2 mΩ // 75 µΩ = 72 µΩ

Measurement principle

The test circuit is tuned with the breaker in both the closed and opened positions. During tuning the impedance level of the test circuit is measured with a high frequency signal. The frequency is swept to find the optimal frequency to maximize the measurement range and automatically set the threshold levels.

After this tuning procedure has been performed, the test system will automatically detect if the main contact and the PIR contact are opened or closed.

The result is interpreted in the same way as conventional timing, and all results are in accordance with the relevant IEC and IEEE/ANSI standards.

Testing GIS circuit breakers with DCM DualGround™

The major advantage with GIS is the reduction of space required compared with air-insulated substations. Also, the maintenance and test interval for circuit breakers installed in GIS is longer than in air-insulated installations. GIS has been installed since the 1980s and much of it is reaching the age when maintenance is needed.

The most important diagnostic tool for GIS circuit breakers is the main contact timing described previously. Conventional timing requires that the ground be removed from at least one side of the circuit breaker. An isolated ground switch has a built-in feature that permits access to the primary circuit without grounding it. An isolated ground switch is, therefore, required on at least one side for a conventional timing without fully dismantling the GIS.

This feature allows testing of CB timing using the normal single ground method, but it is necessary to remove the ground switch jumper, which as discussed earlier, subjects the testing personnel to high safety risks. In practice, capacitive coupled voltages of up to 4 kV have been reported, which is extremely dangerous.

Early GIS installations rarely have insulated ground switches installed. Their use has increased over the decades, but it is still common to find new installations without them. In such cases, the dismantling required for conventional timing is time consuming and expensive. Also, if the bolts are not properly drawn, there will be leakage of SF6.

The DCM dual ground method is, under specific conditions, capable of performing timing measurements on a GIS circuit breaker even when

there is no isolated ground switch available, whereas all other methods, including DRM, will fail to measure timing with both sides of the breaker grounded. These conditions include, for example, there being an access point to the primary circuit outside the gas insulated part, e.g. a bushing connected to an open air line.

Generator circuit breakers

The power outlet from a turbine in a power plant has a high current capacity; the short circuit current can be around 900 kA at 11 to 33 kV. The high current requires very thick conductors to avoid overheating. The bus bars and couplings are enormous, with hundreds of screws that must be tightened to a precise torque (Fig 9).

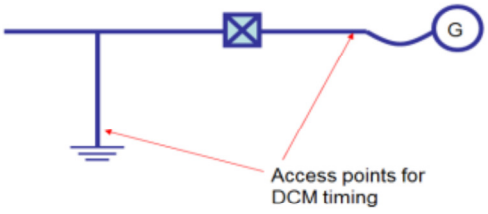

Fig 9. Illustration of GCB connection and access for DCM dual ground without need of disconnection

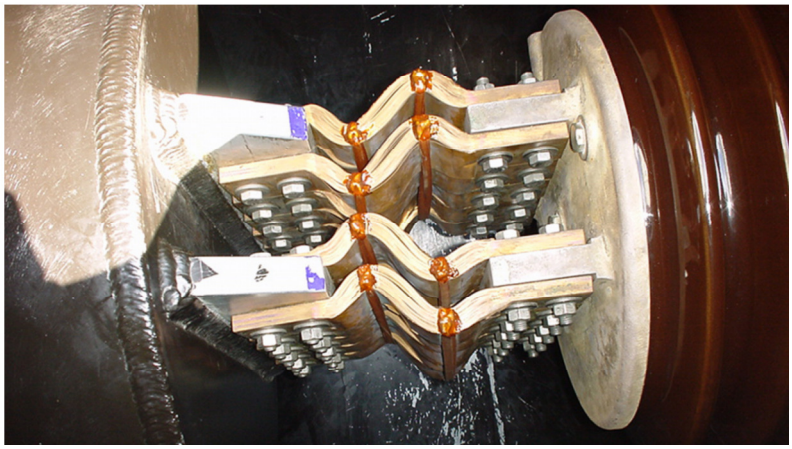

Disconnection of the bus bar takes more than a day. If even one screw is tightened to the wrong torque, it will result in a point of increased resistance and heating. If the heating is serious, the power plant will need to be shut down for the loose bolt to be properly tightened. Knowing this, it is easy to understand why power plant owners are reluctant to allow the disconnection of bolted bus bars for timing measurements.

All service work in power plants is scheduled around planned overhaul events. At this time, there are all manner of personnel working on the turbine and power line. Safety demands that the generator circuit breakers be grounded at both ends during these planned service events.

Timing of the main contacts with conventional methods using a DC voltage is now only possible if one bus bar is disconnected. The DCM method, however, allows timing with both sides grounded.

The time-consuming work to disconnect the bus bar is eliminated along with the risk of loose bolts causing resistive overheating.

Pre-insertion resistor (PIR)

With a PIR in the circuit breaker and while it is switched on, the impedance for the test circuit is changed. With the third generation of DCM it is possible to detect the PIR impedance level and thereby present the PIR timing at the same time as the main contact timing is measured. This is a huge benefit since PIRs are used most frequently at high voltage levels where the likelihood of hazardous induced currents is high. The DCM technique allows the measurement of PIR contacts, which is impossible using DRM dual ground.

Conclusion

The additional safety and the principle of different methods for measuring timing on a circuit breaker with both sides grounded has been discussed and the superiority of the DCM DualGround™ method has been explained. Furthermore, time saving features and benefits of DCM have been shown. Examples include GCB, GIS CBs and CBs with PIRs. DCM DualGround™ saves up to one working day, reducing shut down and commissioning time. This is true in every case where the ground system cannot be removed or is not accessible.